LASER®

Part Nos. 8425-8437

Type B

Type A

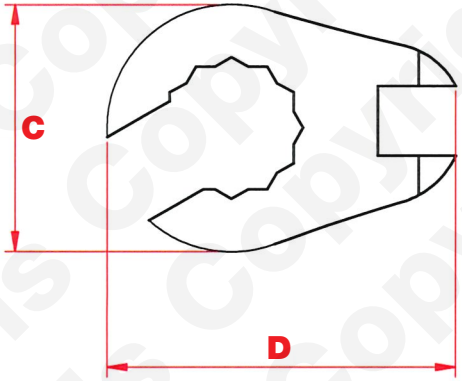

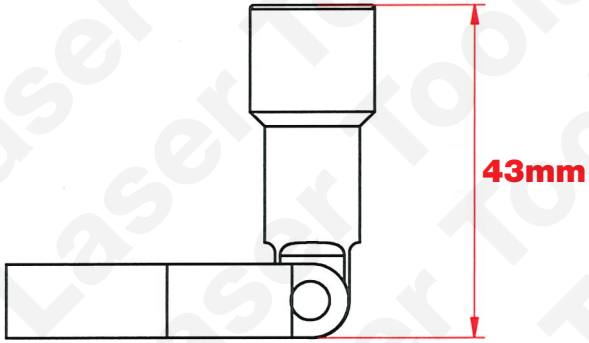

Size	10mm	11mm	12mm	13mm	14mm	15mm	16mm	17mm	18mm	19mm	21mm	22mm
A	10mm	10.5mm	10.5mm	11.3mm	11.3mm	11.3mm	12mm	12mm	12mm	12.5mm	12.5mm	12.5mm
B	7.8mm	8.8mm	9.5mm	/	/	/	/	/	/	/	/	/
C	18.5mm	21mm	23.5mm	25.9mm	25.5mm	27.7mm	29.5mm	29.5mm	29.5mm	32mm	39.5mm	41.5mm
D	34mm	35.8mm	39mm	41.5mm	41.5mm	44mm	46mm	46mm	46mm	47.5mm	55.5mm	57.5mm
Type	A	A	A	B	B	B	B	B	B	B	B	B

Copyright Laser Tools